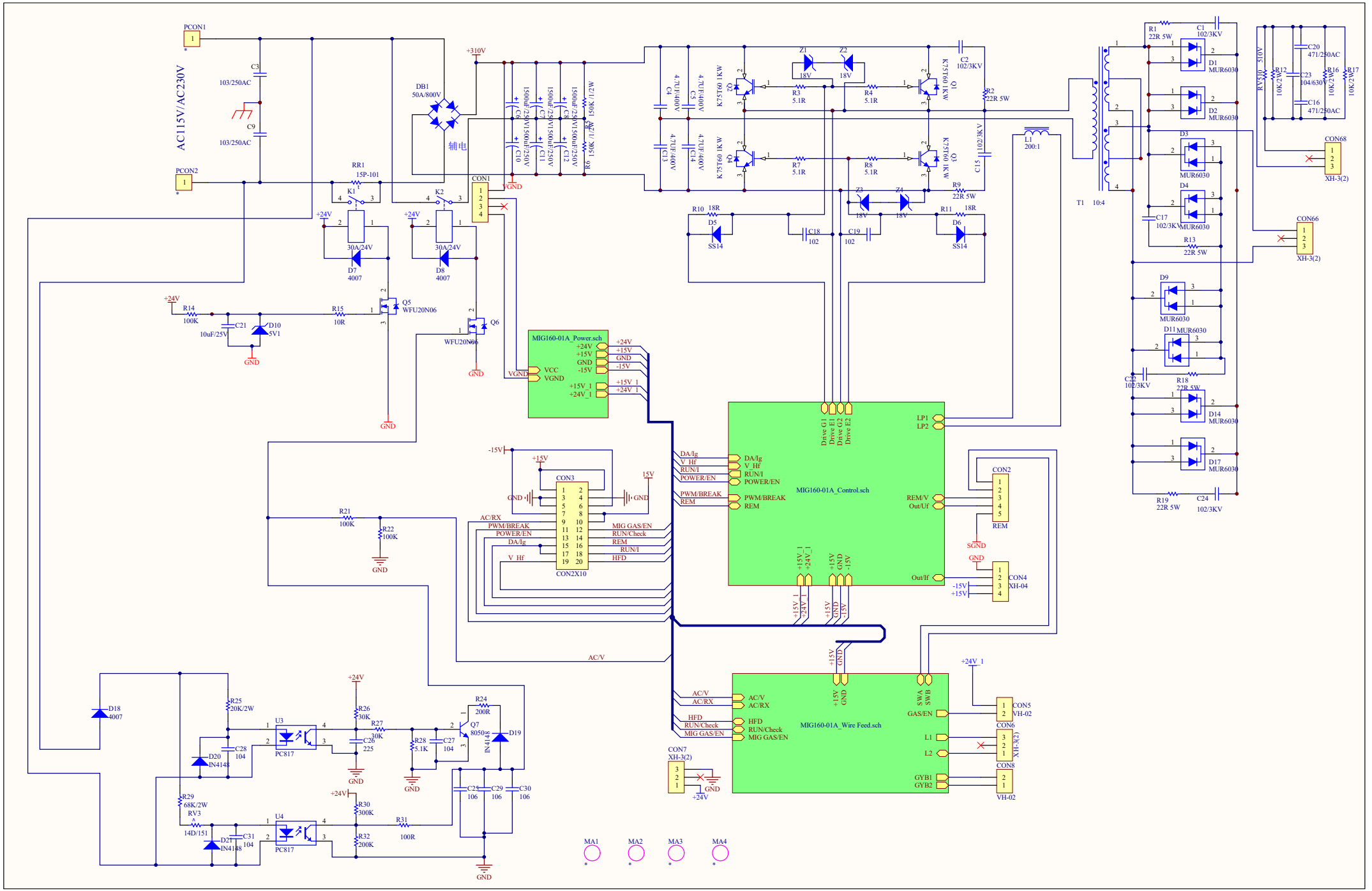
AC115V/AC230V
PCON1
PCON2
C3
103/250AC
C9
103/250AC
DB1
50A/800V
辅电
+310V
C6
1500uF/250V
C7
1500uF/250V
C8
1500uF/250V
C10
1500uF/250V
C11
1500uF/250V
C12
1500uF/250V
R6
W21/1/30K51
R7
W21/1/30K51
GND
RR1
15P-101
K1
K2
+24V
30A/24V
D7
4007
D8
4007
CON1
R14
100K
C21
10uF/25V
D10
5V1
R15
10R
Q5
WFU20N06
Q6
WFU20N06
MIG160-01A_Power.sch
VCC
VGND
+24V
+15V
GND
-15V
+15V_1
+24V_1
-15V
+15V
15V
CON3
CON2X10
AC/RX
PWM/BREAK
POWER/EN
DA/Ig
V_Hf
MIG GAS/EN
RUN/Check
REM
RUN/I
HFD
R21
100K
R22
100K
C4
4.7UF/400V
C5
4.7UF/400V
C13
4.7UF/400V
C14
4.7UF/400V
Q2
K75T60 1KW
Q4
K75T60 1KW
Q1
K75T60 1KW
Q3
K75T60 1KW
Z1
18V
Z2
18V
Z3
18V
Z4
18V
R3
5.1R
R4
5.1R
R7
5.1R
R8
5.1R
R2
22R 5W
R9
22R 5W
C2
102/3KV
C15
102/3KV
R10
18R
D5
SS14
R11
18R
D6
SS14
C18
102
C19
102
L1
200:1
T1
10:4
R1
22R 5W
C1
102/3KV
D1
MUR6030
D2
MUR6030
D3
MUR6030
D4
MUR6030
C17
102/3KV
R13
22R 5W
D9
MUR6030
D11
MUR6030
C22
102/3KV
R18
22R 5W
D14
MUR6030
D17
MUR6030
R19
22R 5W
C24
102/3KV
RV510
510V
R12
10K/2W
C20
471/250AC
C23
104/630
C16
471/250AC
R16
10K/2W
R17
10K/2W
CON68
XH-3(2)
CON66
XH-3(2)
MIG160-01A_Control.sch
Drive G1
Drive E1
Drive G2
Drive E2
LP1
LP2
REM/V
Out/Uf
Out/If
CON2
REM
SGND
CON4
XH-04
-15V
+15V
MIG160-01A_Wire Feed.sch
SWA
SWB
GAS/EN
L1
L2
GYB1
GYB2
+24V_1
CON5
VH-02
CON6
XH-3(2)
CON8
VH-02
CON7
XH-3(2)
D18
4007
R25
20K/2W
U3
PC817
C28
104
D20
IN4148
R26
30K
R27
30K
C26
225
R24
200R
Q7
8050
R28
5.1K
C27
104
D19
IN4148
C25
106
C29
106
C30
106
R29
68K/2W
RV3
14D/151
D21
IN4148
C31
104
U4
PC817
R30
300K
R31
100R
R32
200K
MA1
MA2
MA3
MA4

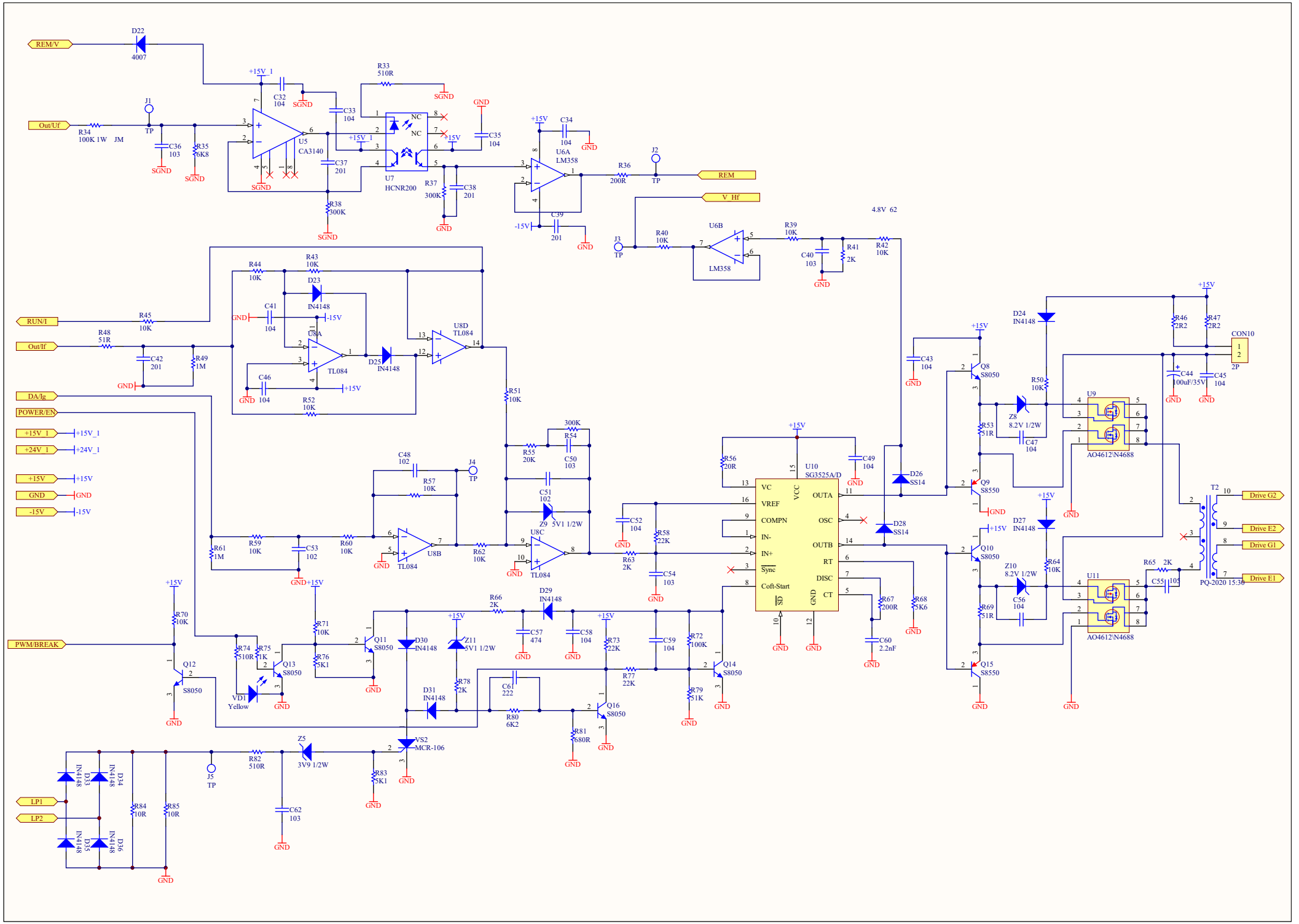
REM/V
D22
4007
+15V_1
C32
104
SGND
R33
510R
Out/Uf
J1
TP
R34
100K 1W JM
C36
103
R35
6K8
U5
CA3140
C33
104
NC
NC
U7
HCNR200
C37
201
R38
300K
R37
300K
C38
201
C35
104
GND
+15V
C34
104
U6A
LM358
C39
201
-15V
R36
200R
J2
REM
V_Hf
J3
R40
10K
U6B
LM358
R39
10K
C40
103
R41
2K
R42
10K
4.8V 62
RUN/I
R45
10K
R44
10K
R43
10K
D23
IN4148
C41
104
U8A
TL084
D25
IN4148
U8D
TL084
Out/If
R48
51R
C42
201
R49
1M
C46
104
R52
10K
R51
10K
DA/Ig
POWER/EN
+15V_1
+24V_1
+15V
GND
-15V
R55
20K
300K
R54
C50
103
C51
102
Z9 5V1 1/2W
C48
102
R57
10K
J4
TP
U8B
TL084
U8C
TL084
R61
1M
R59
10K
C53
102
R60
10K
R62
10K
R63
2K
C52
104
R58
22K
C54
103
R56
20R
U10
SG3525A/D
VC
VREF
COMPN
IN-
IN+
Sync
Coft-Start
SD
VCC
OUTA
OSC
OUTB
RT
DISC
CT
GND
C49
104
D26
SS14
D28
SS14
R67
200R
R68
5K6
C60
2.2nF
C43
104
Q8
S8050
Q9
S8550
Q10
S8050
Q15
S8550
D24
IN4148
R50
10K
Z8
8.2V 1/2W
C47
104
R53
51R
D27
IN4148
Z10
8.2V 1/2W
C56
104
R69
51R
R64
10K
U9
AO4612\N4688
U11
AO4612\N4688
R46
2R2
R47
2R2
CON10
2P
C44
100uF/35V
C45
104
T2
PQ-2020 15:36
Drive G2
Drive E2
Drive G1
Drive E1
R65
2K
C55
105
PWM/BREAK
R70
10K
Q12
S8050
R74
510R
R75
1K
Q13
S8050
VD1
Yellow
R71
10K
R76
5K1
Q11
S8050
D30
IN4148
Z11
5V1 1/2W
R66
2K
D29
IN4148
C57
474
C58
104
R73
22K
R77
22K
C59
104
R72
100K
Q14
S8050
R79
51K
R78
2K
D31
IN4148
C61
222
R80
6K2
Q16
S8050
R81
680R
VS2
MCR-106
Z5
3V9 1/2W
R82
510R
R83
5K1
J5
TP
C62
103
LP1
LP2
D33
IN4148
D34
IN4148
D35
IN4148
D36
IN4148
R84
10R
R85
10R

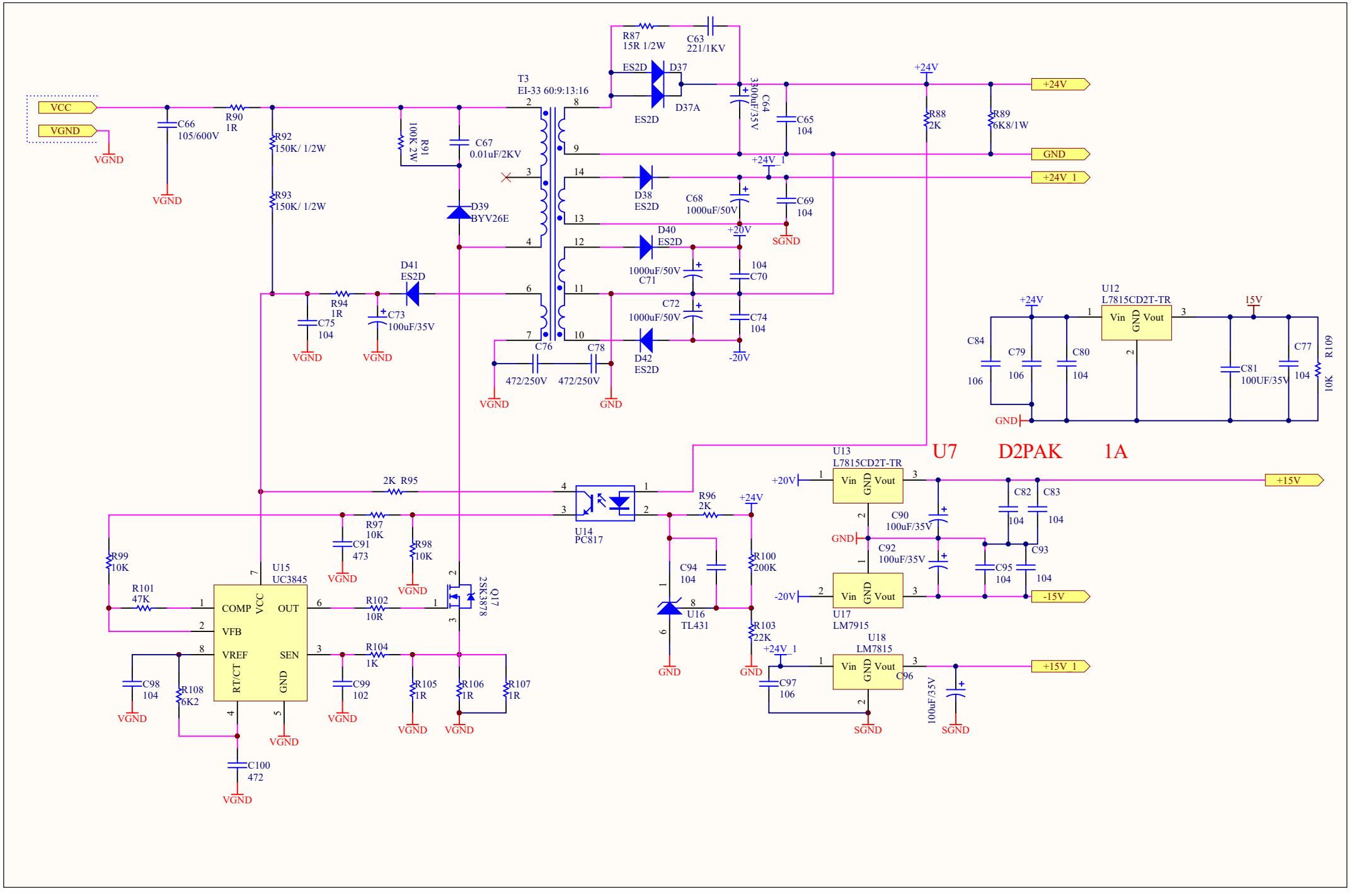
VCC
VGND
C66
105/600V
R90
1R
R92
150K/ 1/2W
R93
150K/ 1/2W
R91
100K 2W
C67
0.01uF/2KV
D39
BYV26E
T3
EI-33 60:9:13:16
R87
15R 1/2W
C63
221/1KV
ES2D
D37
D37A
C64
330uF/35V
C65
104
+24V
R88
2K
R89
6K8/1W
GND
+24V_1
D38
ES2D
C68
1000uF/50V
C69
104
SGND
+20V
D40
ES2D
1000uF/50V
C71
104
C70
C72
1000uF/50V
C74
104
-20V
D42
ES2D
C76
C78
472/250V
472/250V
D41
ES2D
R94
1R
C75
104
C73
100uF/35V
U12
L7815CD2T-TR
Vin
GND
Vout
15V
C84
106
C79
106
C80
104
C81
100UF/35V
C77
104
R109
10K
U7 D2PAK 1A
U13
L7815CD2T-TR
+15V
C82
104
C83
104
C90
100uF/35V
C92
100uF/35V
C93
104
C95
104
U17
LM7915
-15V
U18
LM7815
+15V_1
C96
100uF/35V
C97
106
2K R95
U14
PC817
R96
2K
R97
10K
C91
473
R98
10K
R99
10K
R101
47K
U15
UC3845
COMP
VCC
OUT
VFB
VREF
SEN
RT/CT
GND
R102
10R
Q17
2SK3878
R104
1K
C98
104
R108
6K2
C99
102
R105
1R
R106
1R
R107
1R
C100
472
C94
104
U16
TL431
R100
200K
R103
22K

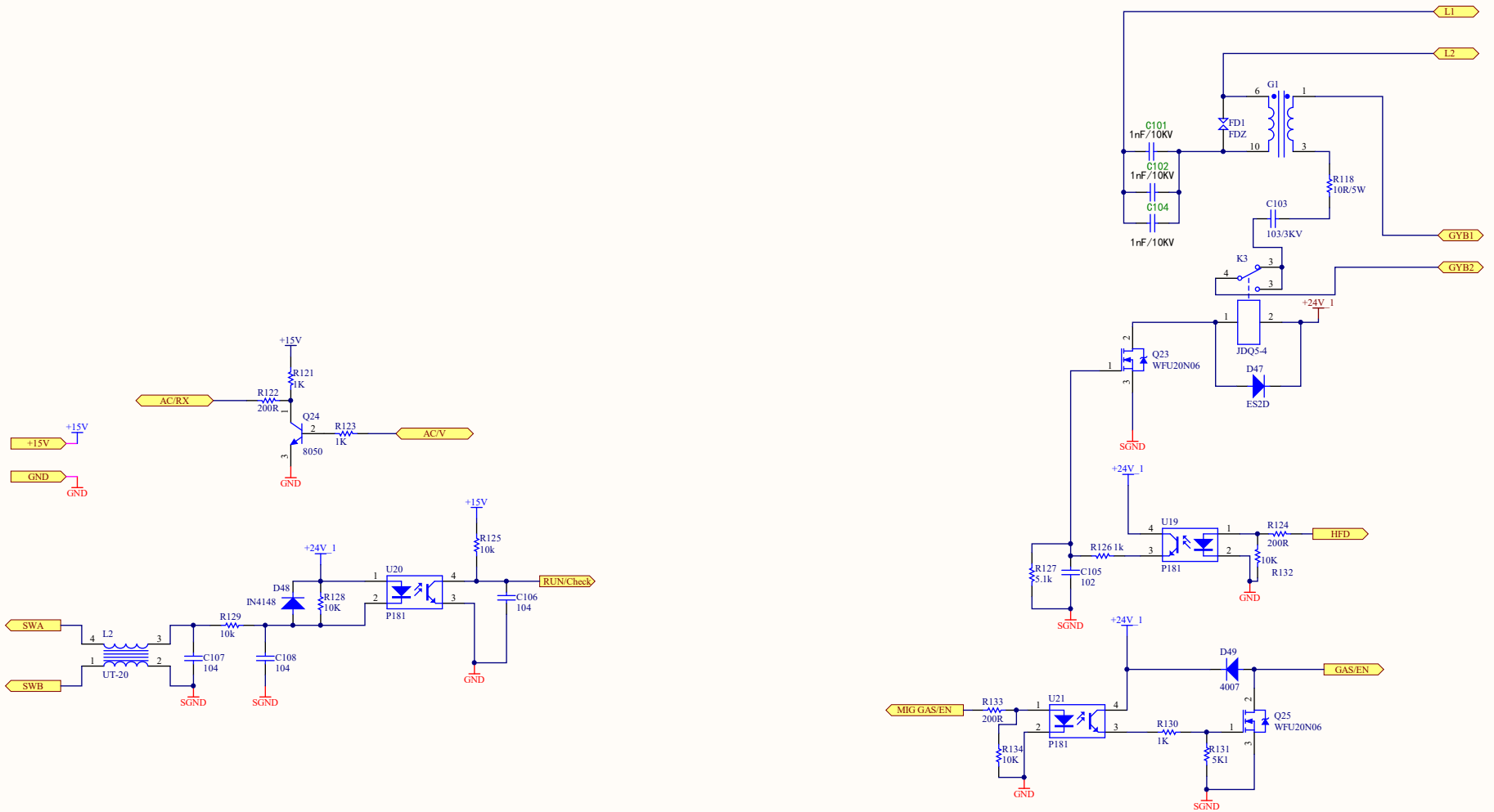
L1
L2
G1
FD1
FDZ
C101
1nF/10KV
C102
1nF/10KV
C104
1nF/10KV
R118
10R/5W
C103
103/3KV
GYB1
GYB2
K3
+24V_1
JDQ5-4
Q23
WFU20N06
D47
ES2D
SGND
+24V_1
U19
P181
R124
200R
HFD
R126 1k
R127
5.1k
C105
102
10K
R132
GND
SGND
+24V_1
D49
4007
GAS/EN
MIG GAS/EN
R133
200R
U21
P181
R130
1K
Q25
WFU20N06
R134
10K
R131
5K1
GND
SGND
+15V
R121
1K
AC/RX
R122
200R
Q24
8050
R123
1K
AC/V
+15V
+15V
GND
GND
GND
+15V
R125
10k
+24V_1
U20
P181
RUN/Check
D48
IN4148
R128
10K
C106
104
SWA
L2
UT-20
SWB
R129
10k
C107
104
C108
104
SGND
SGND
GND