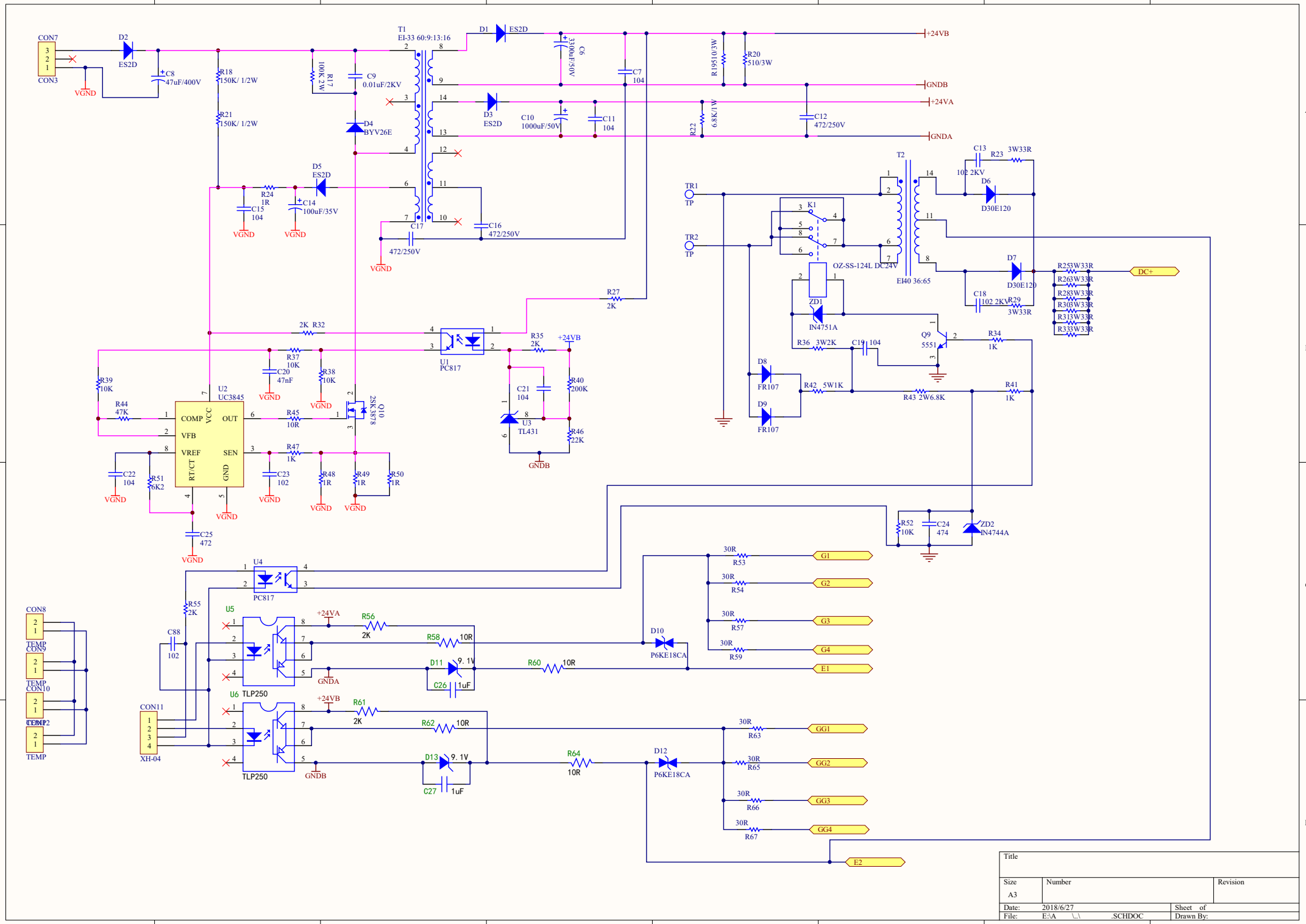
CON7
CON3
D2
ES2D
VGND
C8
47uF/400V
R18
150K/ 1/2W
R21
150K/ 1/2W
R17
100K 2W
C9
0.01uF/2KV
D4
BYV26E
T1
EI-33 60:9:13:16
D1
ES2D
C6
3300uF/50V
C7
104
R19 510/3W
R20
510/3W
+24VB
GNDB
+24VA
GNDA
D3
ES2D
C10
1000uF/50V
C11
104
R22
6.8K/1W
C12
472/250V
D5
ES2D
R24
1R
C15
104
C14
100uF/35V
C17
472/250V
C16
472/250V
R27
2K
2K R32
U1
PC817
R35
2K
R37
10K
C20
47nF
R38
10K
R39
10K
R44
47K
U2
UC3845
COMP
VFB
VREF
RT/CT
VCC
OUT
SEN
GND
R45
10R
R47
1K
Q10
2SK3878
C21
104
U3
TL431
R40
200K
R46
22K
C22
104
R51
6K2
C23
102
R48
1R
R49
1R
R50
1R
C25
472
T2
EI40 36:65
C13
102 2KV
R23
3W33R
D6
D30E120
TR1
TP
TR2
TP
K1
OZ-SS-124L DC24V
D7
D30E120
R25 3W33R
R26 3W33R
R27 3W33R
R28 3W33R
R29 3W33R
R30 3W33R
R31 3W33R
R32 3W33R
DC+
C18
102 2KV
ZD1
IN4751A
R36 3W2K
C19 104
Q9
5551
R34
1K
D8
FR107
D9
FR107
R42 5W1K
R43 2W6.8K
R41
1K
R52
10K
C24
474
ZD2
IN4744A
U4
PC817
R55
2K
C88
102
U5
TLP250
+24VA
R56
2K
R58
10R
D11
9. 1V
C26
1uF
R60
10R
D10
P6KE18CA
30R
R53
R54
R57
R59
G1
G2
G3
G4
E1
CON8
TEMP
CON9
TEMP
CON10
TEMP
CON12
TEMP
CON11
XH-04
U6
TLP250
+24VB
R61
2K
R62
10R
D13
9. 1V
C27
1uF
R64
10R
D12
P6KE18CA
R63
R65
R66
R67
GG1
GG2
GG3
GG4
E2
Title
Size
A3
Number
Revision
Date: 2018/6/27
File: E:\A \..\ .SCHDOC
Sheet of
Drawn By: