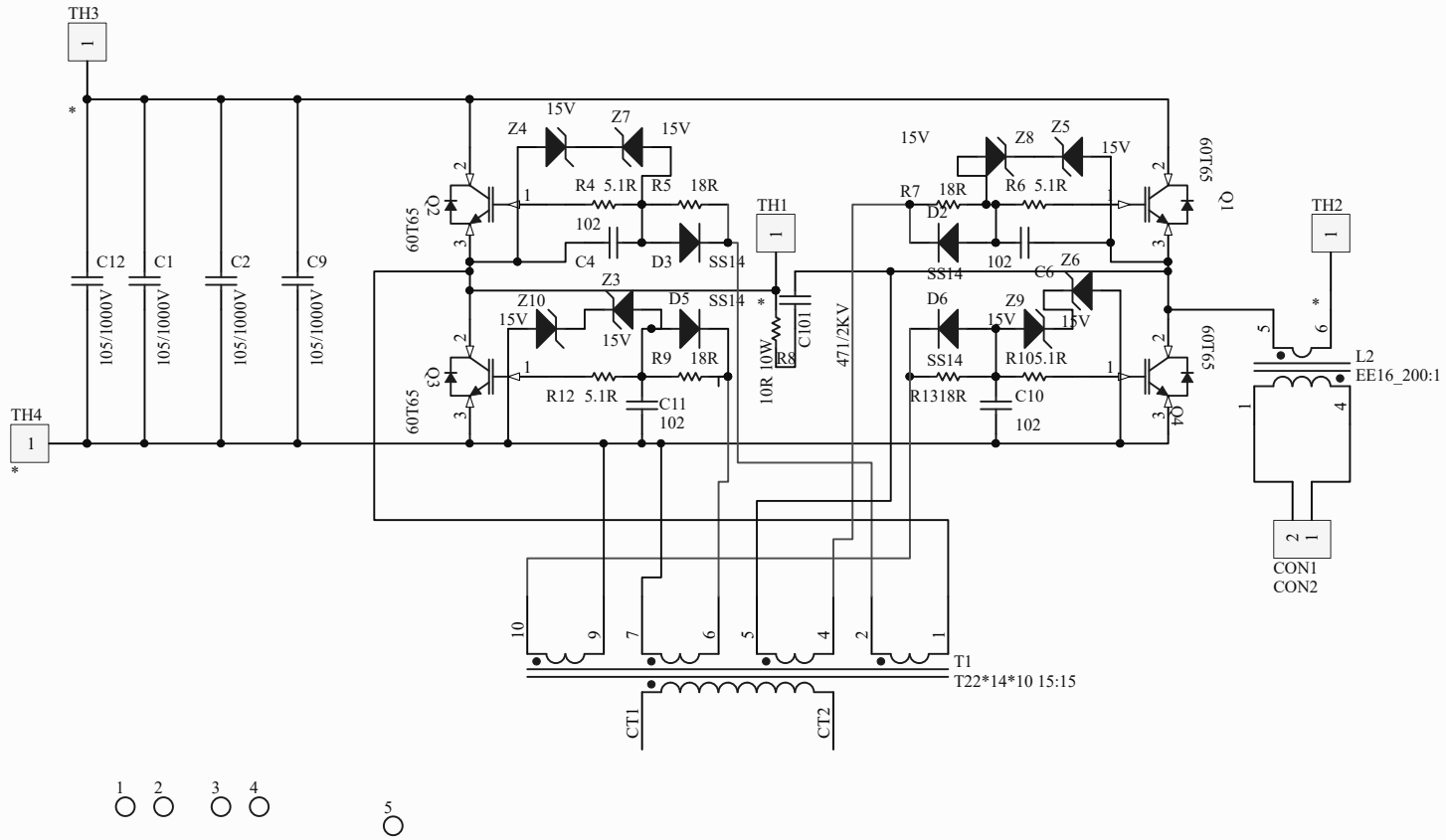

Title		
Size A4	Number	Revision
Date: 2023/9/1		Sheet of
File: \\..\ML-NB-XXX.SchDoc		Drawn By: