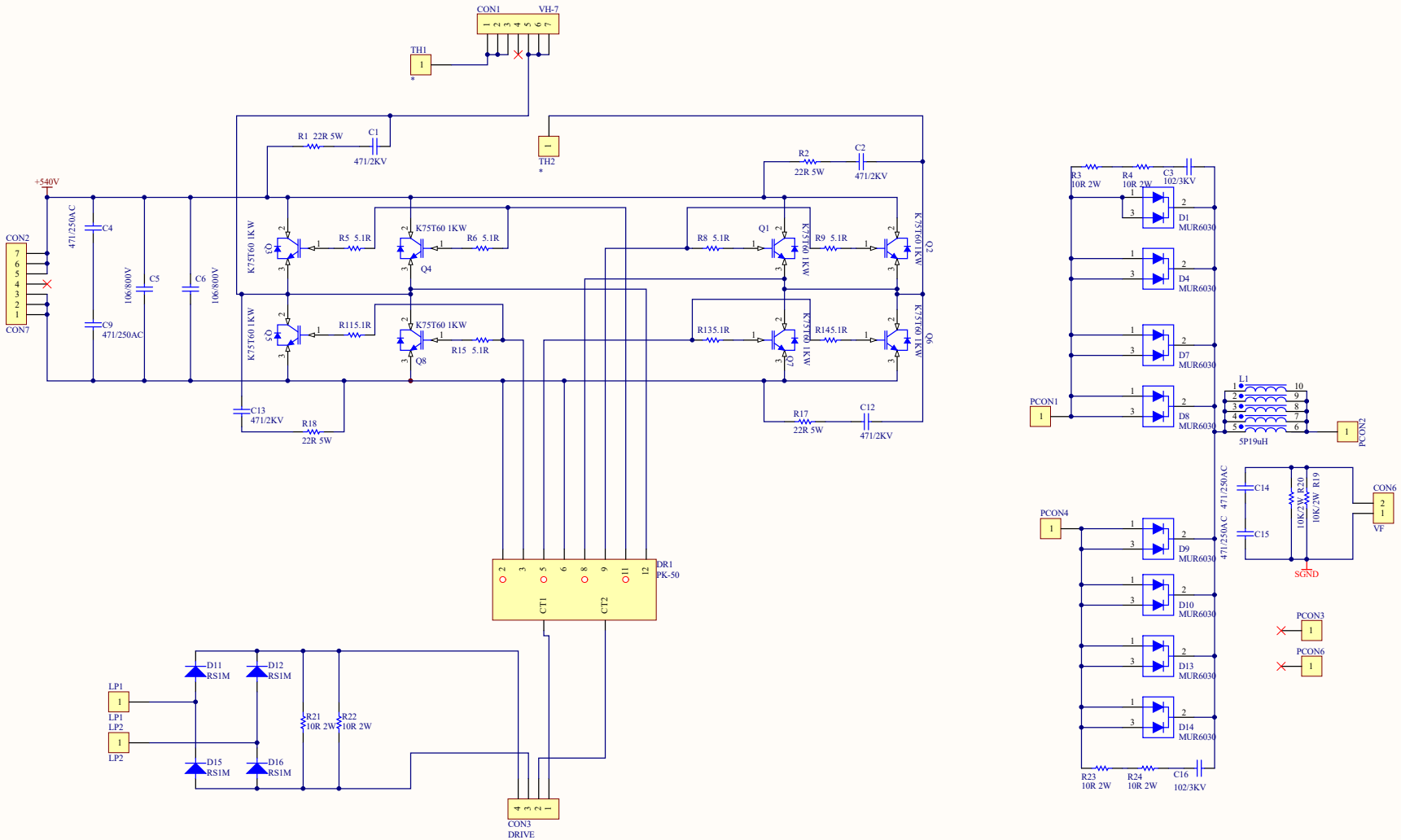
CON1
VH-7
TH1
TH2
R1 22R 5W
C1
471/2KV
R2
22R 5W
C2
471/2KV
+540V
CON2
CON7
471/250AC
C4
C9
471/250AC
106/800V
C5
C6
106/800V
K75T60 1KW
Q3
R5 5.1R
K75T60 1KW
Q4
R6 5.1R
K75T60 1KW
Q5
R115.1R
K75T60 1KW
Q8
R15 5.1R
R8 5.1R
Q1
K75T60 1KW
R9 5.1R
K75T60 1KW
Q2
R135.1R
Q7
K75T60 1KW
R145.1R
K75T60 1KW
Q6
C13
471/2KV
R18
22R 5W
R17
22R 5W
C12
471/2KV
DR1
PK-50
CT1
CT2
LP1
LP2
D11
RS1M
D12
RS1M
D15
RS1M
D16
RS1M
R21
10R 2W
R22
10R 2W
CON3
DRIVE
R3
10R 2W
R4
10R 2W
C3
102/3KV
D1
MUR6030
D4
MUR6030
D7
MUR6030
D8
MUR6030
PCON1
L1
5P19uH
PCON2
PCON4
D9
MUR6030
D10
MUR6030
D13
MUR6030
D14
MUR6030
R23
10R 2W
R24
10R 2W
C16
102/3KV
C14
C15
R20
10K 2W
R19
10K 2W
CON6
VF
SGND
PCON3
PCON6