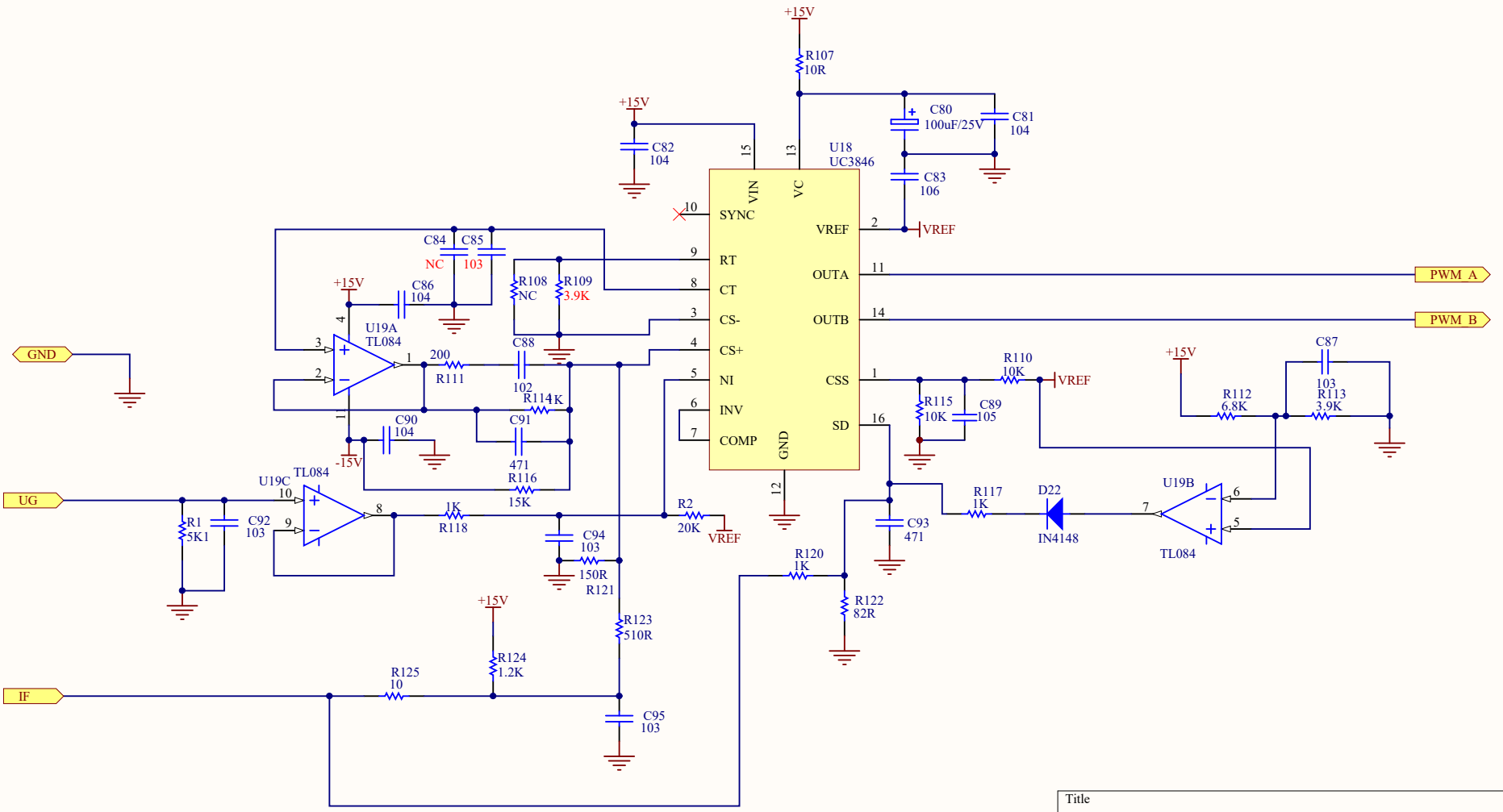

Title		
Size A4	Number	Revision
Date: 2023/2/9		Sheet of
File: E:\A \..\MIG160-01A1_MODE.sch		Drawn By:

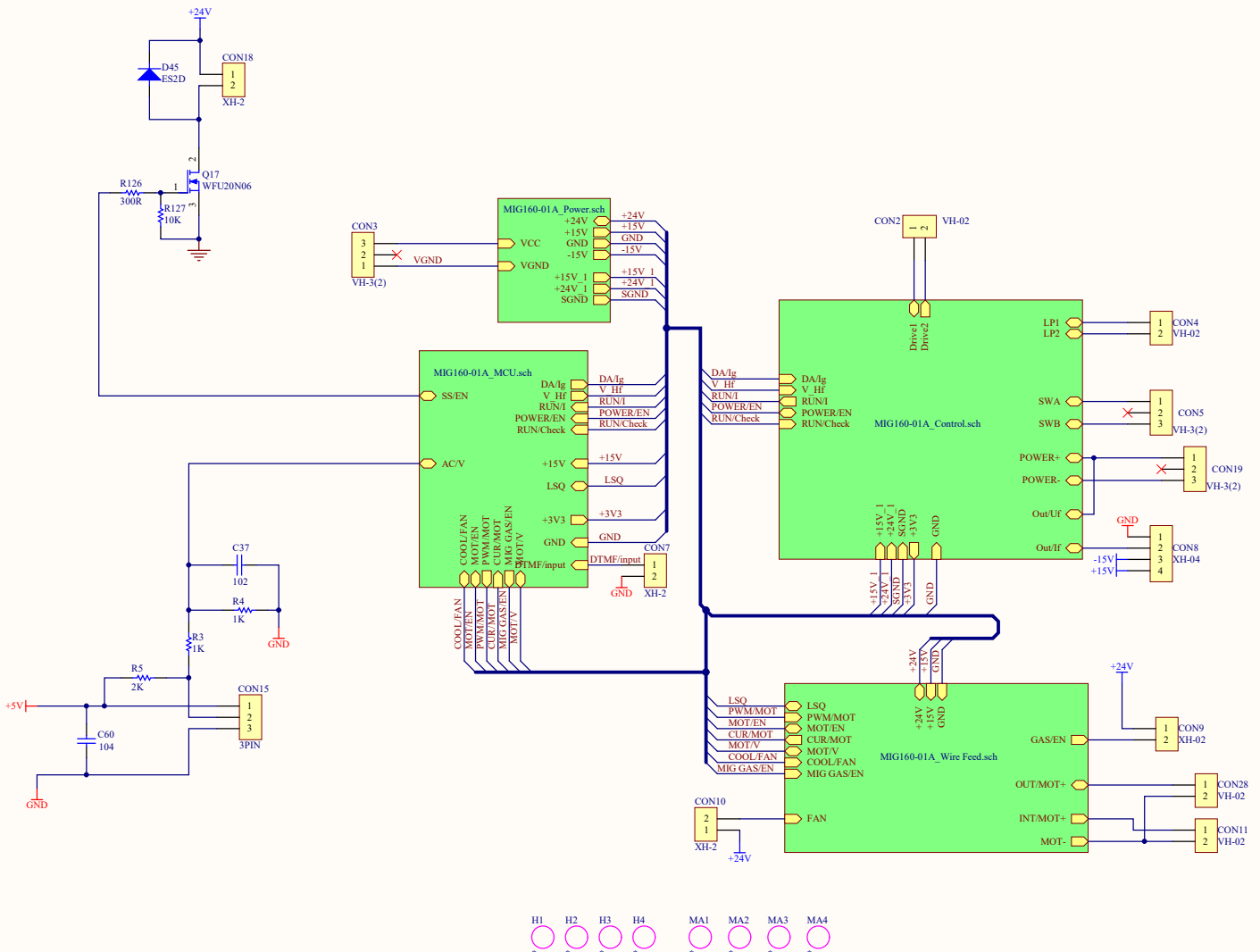
+24V
D45
ES2D
CON18
XH-2
Q17
WFU20N06
R126
300R
R127
10K
CON3
VH-3(2)
VGND
MIG160-01A_Power.sch
VCC
VGND
+24V
+15V
GND
-15V
+15V_1
+24V_1
SGND
MIG160-01A_MCU.sch
SS/EN
AC/V
DA/Ig
V_Hf
RUN/I
POWER/EN
RUN/Check
+15V
LSQ
+3V3
GND
DTMF/input
COOL/FAN
MOT/EN
PWM/MOT
CUR/MOT
MIG GAS/EN
MOT/V
CON7
XH-2
C37
102
R4
1K
R3
1K
R5
2K
C60
104
+5V
CON15
3PIN
CON2
VH-02
Drive1
Drive2
MIG160-01A_Control.sch
LP1
LP2
SWA
SWB
POWER+
POWER-
Out/Uf
Out/If
CON4
VH-02
CON5
VH-3(2)
CON19
VH-3(2)
CON8
XH-04
-15V
+15V
MIG160-01A_Wire Feed.sch
LSQ
PWM/MOT
MOT/EN
CUR/MOT
MOT/V
COOL/FAN
MIG GAS/EN
FAN
GAS/EN
OUT/MOT+
INT/MOT+
MOT-
CON9
XH-02
CON28
VH-02
CON11
VH-02
CON10
XH-2
H1
H2
H3
H4
MA1
MA2
MA3
MA4

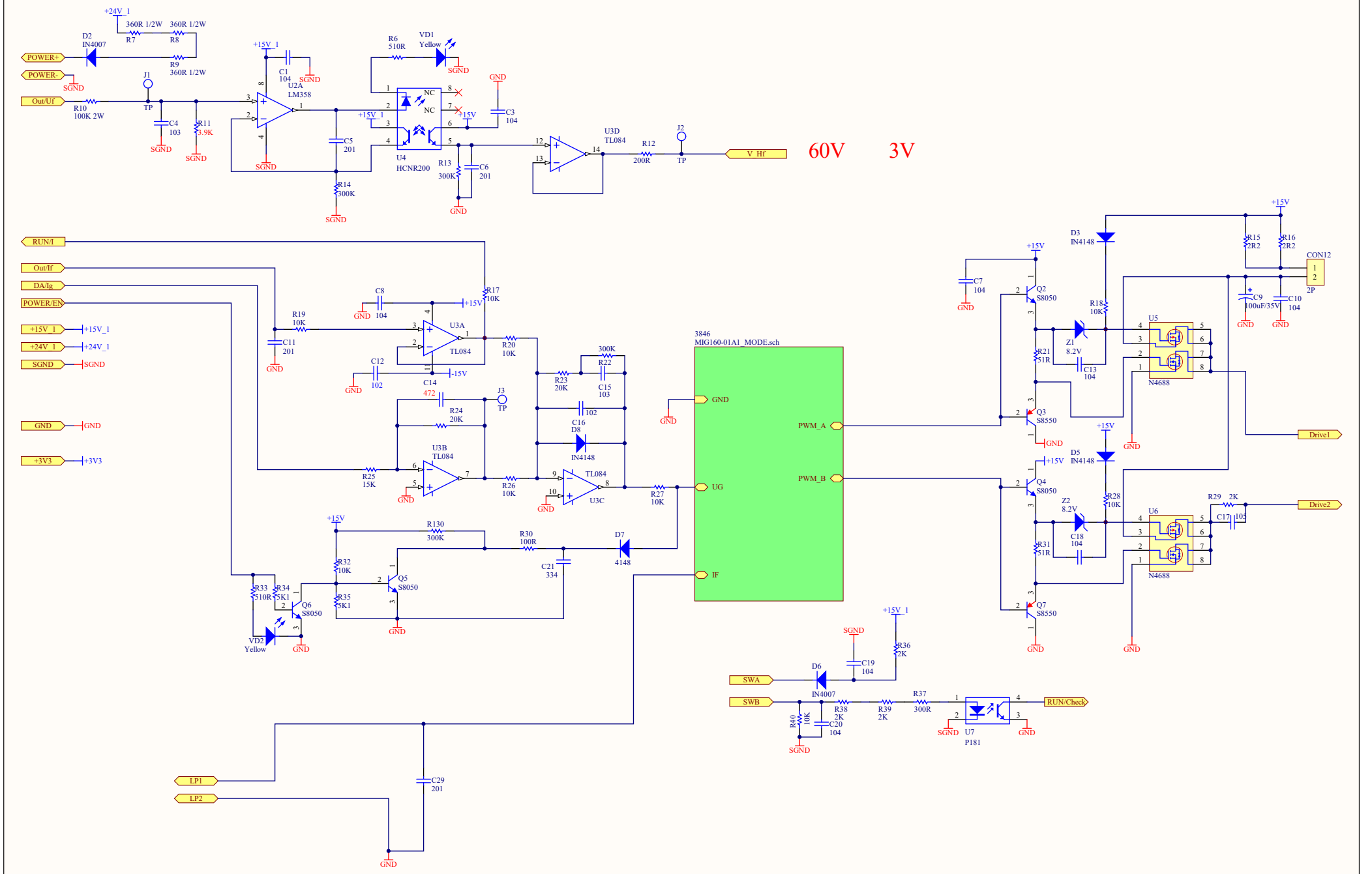
POWER+
POWER-
Out/Uf
RUN/I
Out/If
DA/Ig
POWER/EN
+15V_1
+24V_1
SGND
GND
+3V3
LP1
LP2
V_Hf
60V
3V
3846
MIG160-01A1_MODE.sch
PWM_A
PWM_B
UG
IF
Drive1
Drive2
SWA
SWB
RUN/Check
U2A
LM358
U4
HCNR200
U3D
TL084
U3A
U3B
U3C
Q2
Q3
Q4
Q5
Q6
Q7
S8050
S8550
U5
U6
N4688
U7
P181
CON12
2P

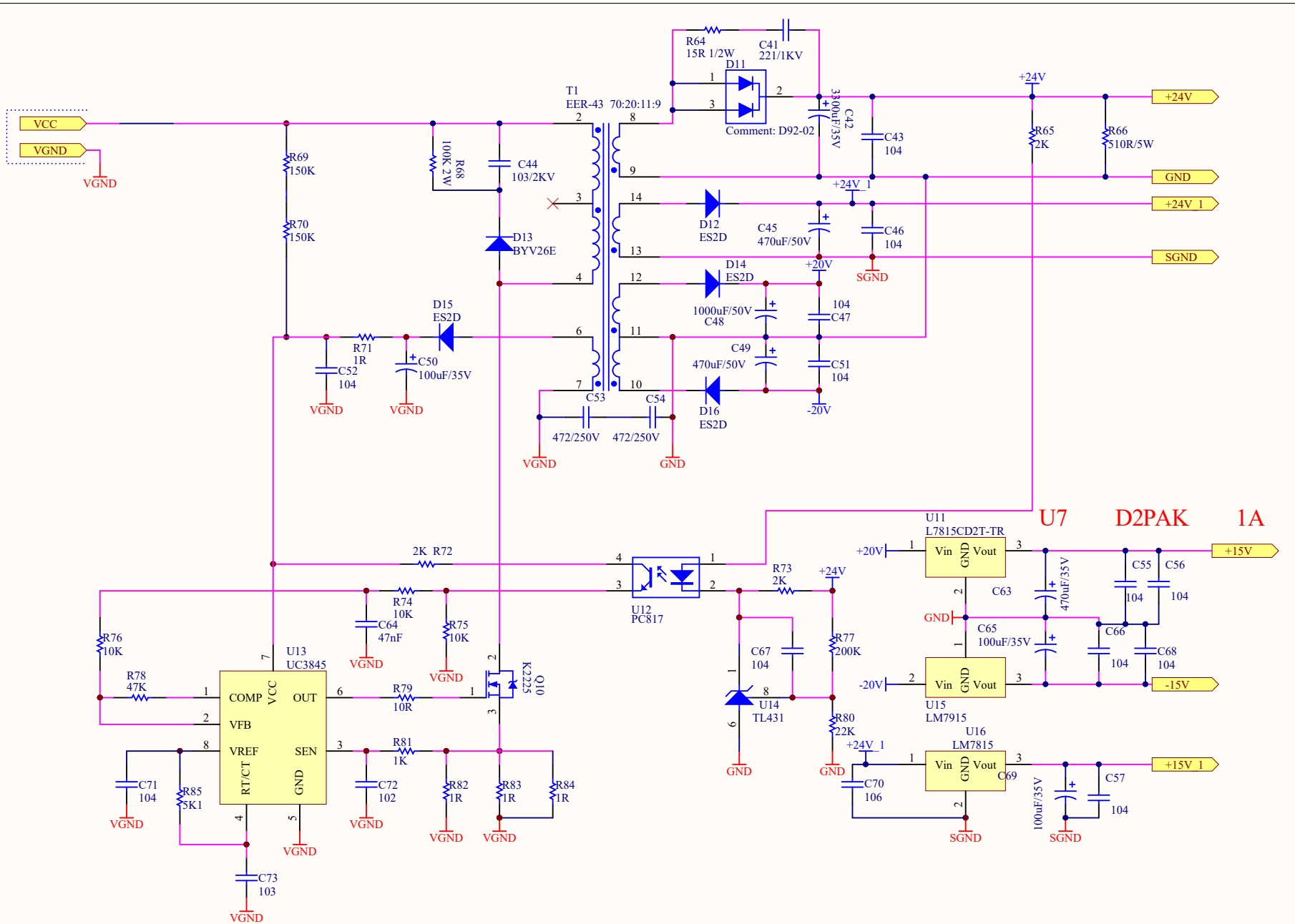
VCC
VGND
R69
150K
R70
150K
R68
100K 2W
C44
103/2KV
D13
BYV26E
T1
EER-43 70:20:11:9
R64
15R 1/2W
C41
221/1KV
D11
Comment: D92-02
C42
3300uF/35V
C43
104
+24V
R65
2K
R66
510R/5W
+24V
GND
+24V_1
SGND
D12
ES2D
C45
470uF/50V
C46
104
D14
ES2D
+20V
1000uF/50V
C48
104
C47
D15
ES2D
R71
1R
C52
104
C50
100uF/35V
C49
470uF/50V
C51
104
D16
ES2D
-20V
C53
472/250V
C54
472/250V
U7 D2PAK 1A
U11
L7815CD2T-TR
Vin GND Vout
+15V
C63
470uF/35V
C55
104
C56
104
C65
100uF/35V
C66
104
C68
104
U15
LM7915
-15V
U16
LM7815
+15V_1
C69
100uF/35V
C57
104
C70
106
2K R72
R73
2K
U12
PC817
R74
10K
C64
47nF
R75
10K
R76
10K
R78
47K
U13
UC3845
COMP
VFB
VREF
RT/CT
VCC
OUT
SEN
GND
R79
10R
Q10
K2225
R81
1K
C71
104
R85
5K1
C72
102
R82
1R
R83
1R
R84
1R
C73
103
C67
104
U14
TL431
R77
200K
R80
22K
+24V_1

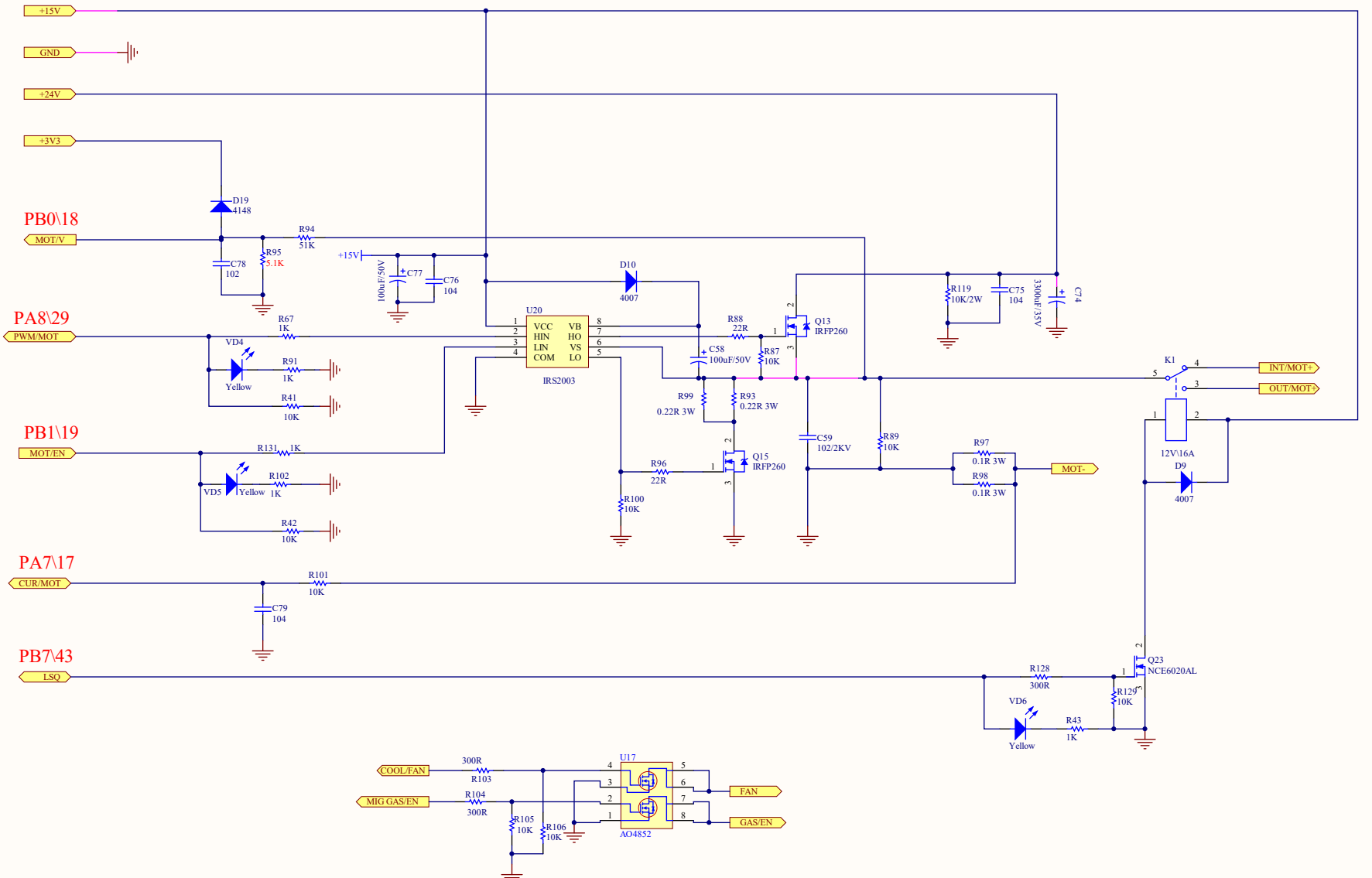
+15V
GND
+24V
+3V3
PB0\18
MOT/V
D19
4148
R94
51K
R95
5.1K
C78
102
+15V
100uF/50V
C77
C76
104
D10
4007
U20
VCC
HIN
LIN
COM
VB
HO
VS
LO
IRS2003
PA8\29
PWM/MOT
R67
1K
VD4
Yellow
R91
1K
R41
10K
R88
22R
Q13
IRFP260
C58
100uF/50V
R87
10K
R99
0.22R 3W
R93
0.22R 3W
R119
10K/2W
C75
104
3300uF/35V
C74
K1
INT/MOT+
OUT/MOT+
12V\16A
D9
4007
PB1\19
MOT/EN
R131
1K
VD5
Yellow
R102
1K
R42
10K
R96
22R
Q15
IRFP260
R100
10K
C59
102/2KV
R89
10K
R97
0.1R 3W
R98
0.1R 3W
MOT-
PA7\17
CUR/MOT
R101
10K
C79
104
PB7\43
LSQ
R128
300R
Q23
NCE6020AL
R129
10K
VD6
Yellow
R43
1K
COOL/FAN
300R
R103
MIG GAS/EN
R104
300R
R105
10K
R106
10K
U17
AO4852
FAN
GAS/EN

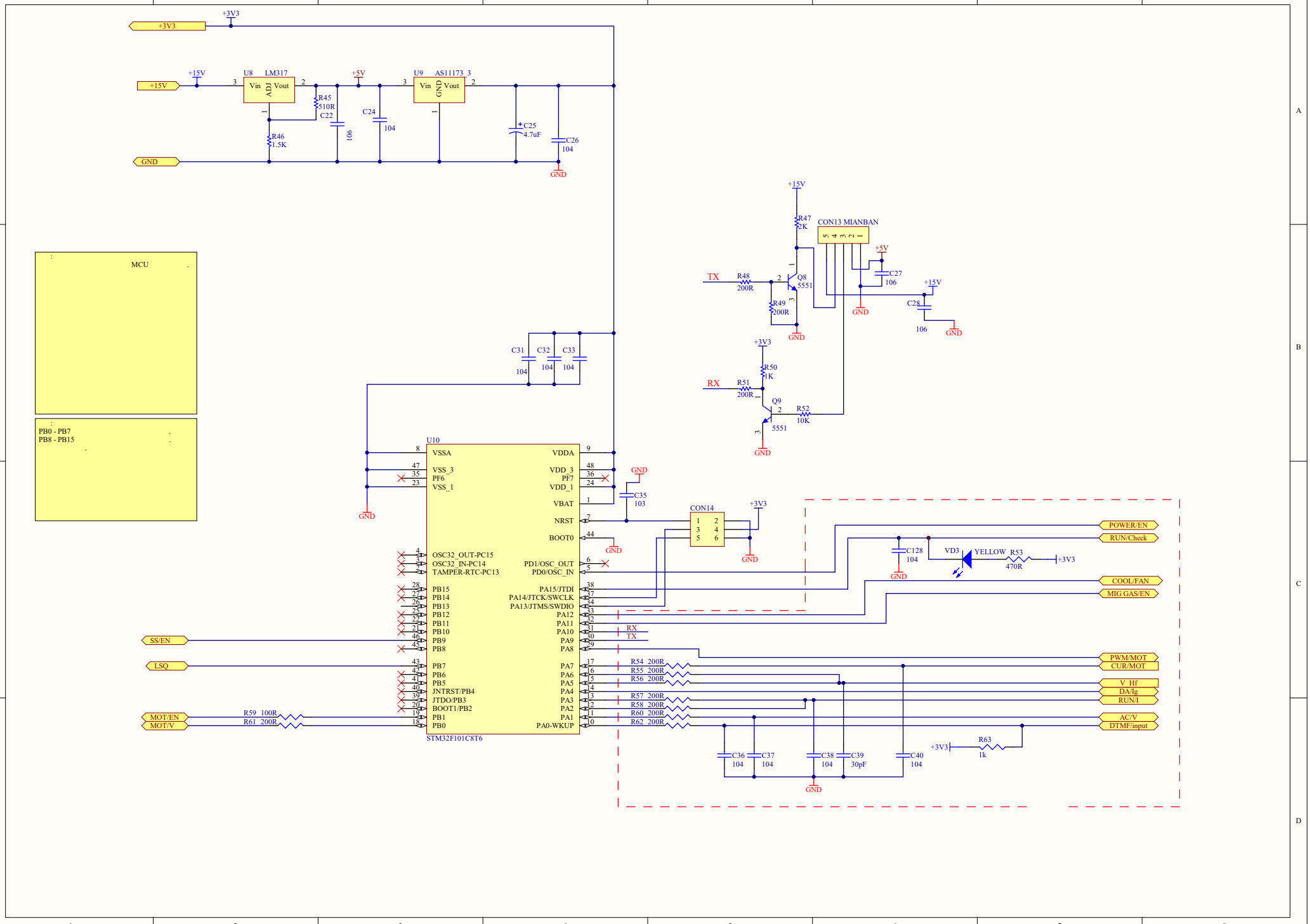
+3V3
+15V
U8 LM317
Vin ADJ Vout
R45 510R
C22 106
R46 1.5K
GND
+5V
U9 AS11173_3
Vin GND Vout
C24 104
C25 4.7uF
C26 104
MCU
PB0 - PB7
PB8 - PB15
C31 104
C32 104
C33 104
U10
VSSA
VSS_3
PF6
VSS_1
VDDA
VDD_3
PF7
VDD_1
VBAT
NRST
BOOT0
OSC32_OUT-PC15
OSC32_IN-PC14
TAMPER-RTC-PC13
PD1/OSC_OUT
PD0/OSC_IN
PB15
PB14
PB13
PB12
PB11
PB10
PB9
PB8
PB7
PB6
PB5
JNTRST/PB4
JTDO/PB3
BOOT1/PB2
PB1
PB0
PA15/JTDI
PA14/JTCK/SWCLK
PA13/JTMS/SWDIO
PA12
PA11
PA10
PA9
PA8
PA7
PA6
PA5
PA4
PA3
PA2
PA1
PA0-WKUP
STM32F101C8T6
C35 103
CON14
SS/EN
LSQ
MOT/EN
MOT/V
R59 100R
R61 200R
RX
TX
R54 200R
R55 200R
R56 200R
R57 200R
R58 200R
R60 200R
R62 200R
C36 104
C37 104
C38 104
C39 30pF
C40 104
R63 1k
POWER/EN
RUN/Check
COOL/FAN
MIG GAS/EN
PWM/MOT
CUR/MOT
V_Hf
DA/Ig
RUN/I
AC/V
DTMF/input
C128 104
VD3 YELLOW
R53 470R
R47 2K
CON13 MIANBAN
C27 106
C28 106
Q8 5551
R48 200R
R49 200R
R50 1K
R51 200R
Q9 5551
R52 10K