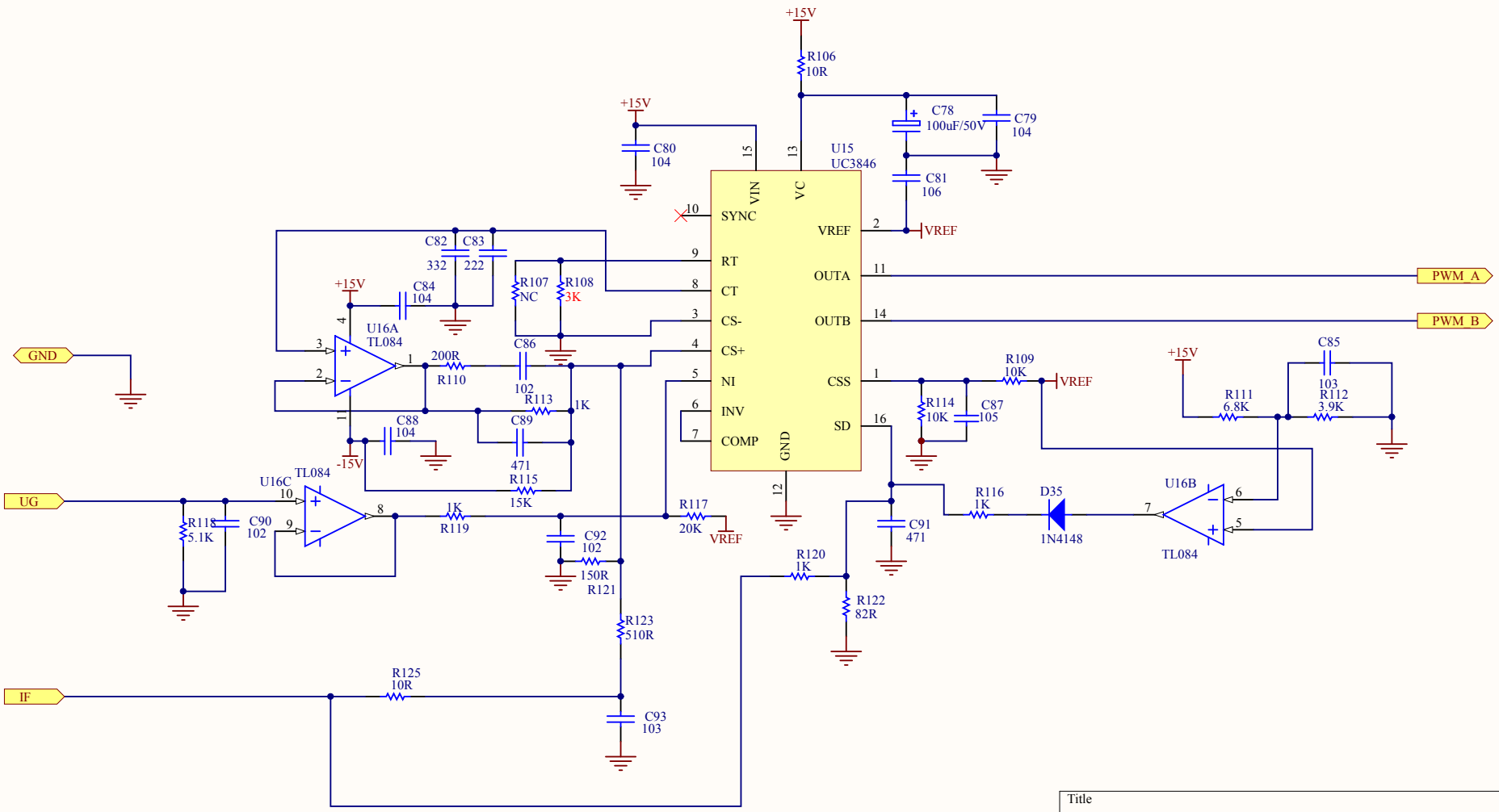

Title		
Size A4	Number	Revision
Date: 2022/3/7		Sheet of
File: E:\ \..\TIG200_3846_MODE.SchDoc		Drawn By:

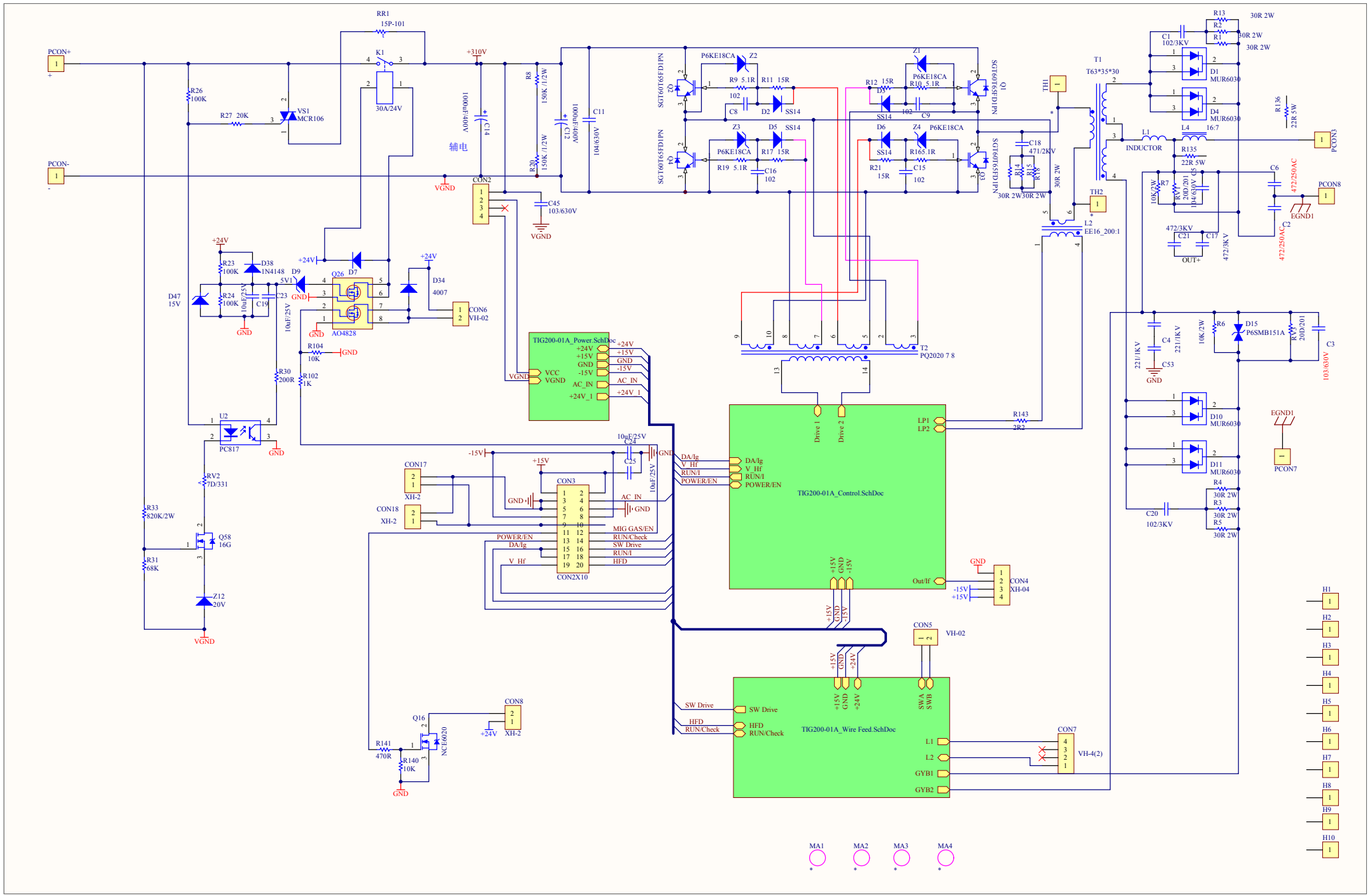
PCON+
PCON-
RR1
15P-101
K1
30A/24V
VS1
MCR106
R26
100K
R27 20K
+310V
辅电
A00#/400V
C14
R8
150K /1/2W
R20
150K/1/2W
C12
1000uF/400V
C11
104/630V
VGND
CON2
C45
103/630V
SGT60T65FD1PN
Q2
Q4
Q1
Q3
P6KE18CA
Z2
Z3
Z1
Z4
Z5
R9 5.1R
R11 15R
R12 15R
R10 5.1R
R19 5.1R
R17 15R
R165 1R
R21 15R
SS14
D2
D3
D5
D6
C8
C9
C16
C15
102
C18
471/2KV
R14
R15
R16
30R 2W
TH1
TH2
T1
T63*35*30
L2
EE16_200:1
T2
PQ2020 7 8
C1
102/3KV
R13
R2
R1
30R 2W
D1
MUR6030
D4
MUR6030
R136
22R 5W
L1
INDUCTOR
L4
16:7
PCON3
R135
22R 5W
C5
104/630V
R7
10K/2W
R8
20D/201
C6
472/250AC
PCON8
EGND1
C2
472/250AC
C21
472/3KV
C17
472/3KV
OUT+
+24V
R23
100K
D38
1N4148
D47
15V
R24
100K
C19
10uF/25V
C23
10uF/25V
D9
5V1
GND
Q26
D7
AO4828
D34
4007
CON6
VH-02
R104
10K
R30
200R
R102
1K
U2
PC817
RV2
7D/331
R33
820K/2W
Q58
16G
R31
68K
Z12
20V
TIG200-01A_Power.SchDoc
VCC
VGND
+24V
+15V
GND
-15V
AC_IN
+24V_1
-15V
CON17
XH-2
CON18
XH-2
CON3
CON2X10
C24
10uF/25V
C25
10uF/25V
DA/Ig
V_Hf
RUN/I
POWER/EN
MIG GAS/EN
RUN/Check
SW Drive
HFD
TIG200-01A_Control.SchDoc
Drive 1
Drive 2
LP1
LP2
Out/If
R143
2R2
CON4
XH-04
CON5
VH-02
SWA
BWA
TIG200-01A_Wire Feed.SchDoc
L1
L2
GYB1
GYB2
CON7
VH-4(2)
CON8
XH-2
Q16
NCE6020
R141
470R
R140
10K
D10
MUR6030
D11
MUR6030
C4
221/1KV
C53
R6
10K/2W
D15
P6SMB151A
R9
20D/201
C3
103/630V
C20
102/3KV
R4
30R 2W
R3
30R 2W
R5
30R 2W
EGND1
PCON7
H1
H2
H3
H4
H5
H6
H7
H8
H9
H10
MA1
MA2
MA3
MA4

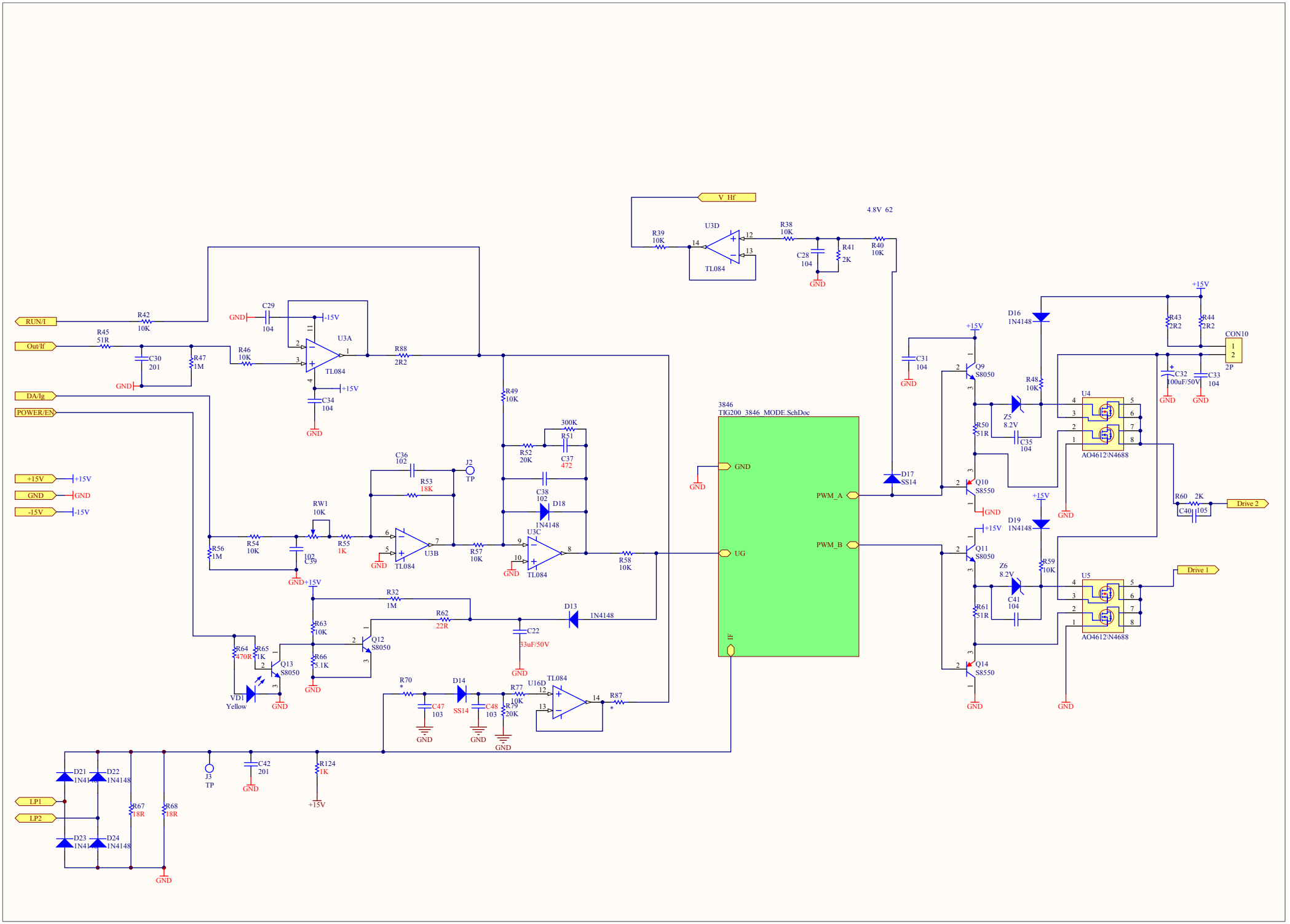
RUN/I
Out/If
DA/Ig
POWER/EN
+15V
GND
-15V
R42 10K
R45 51R
C30 201
R47 1M
R46 10K
C29 104
U3A
TL084
C34 104
R88 2R2
R49 10K
R52 20K
300K
R51
C37 472
C36 102
R53 18K
J2 TP
C38 102
D18 1N4148
U3C
U3B
R55 1K
R57 10K
R58 10K
RW1 10K
R54 10K
R56 1M
C39 102
R32 1M
R62 22R
D13 1N4148
C22 33uF/50V
R63 10K
Q12 S8050
R64 470R
R65 1K
Q13 S8050
R66 5.1K
VD1 Yellow
R70 *
D14 SS14
C47 103
C48 103
R77 10K
R79 20K
U16D
TL084
R87 *
D21 1N4148
D22 1N4148
D23 1N4148
D24 1N4148
R67 18R
R68 18R
LP1
LP2
J3 TP
C42 201
R124 1K
V_Hf
U3D
R39 10K
R38 10K
C28 104
R41 2K
R40 10K
4.8V 62
3846
TIG200_3846_MODE.SchDoc
PWM_A
PWM_B
UG
IF
D17 SS14
C31 104
Q9 S8050
Q10 S8550
Q11 S8050
Q14 S8550
D16 1N4148
D19 1N4148
R48 10K
R59 10K
Z5 8.2V
Z6 8.2V
C35 104
C41 104
R50 51R
R61 51R
U4
U5
AO4612\N4688
R43 2R2
R44 2R2
CON10
2P
C32 100uF/50V
C33 104
R60 2K
C40 105
Drive 2
Drive 1

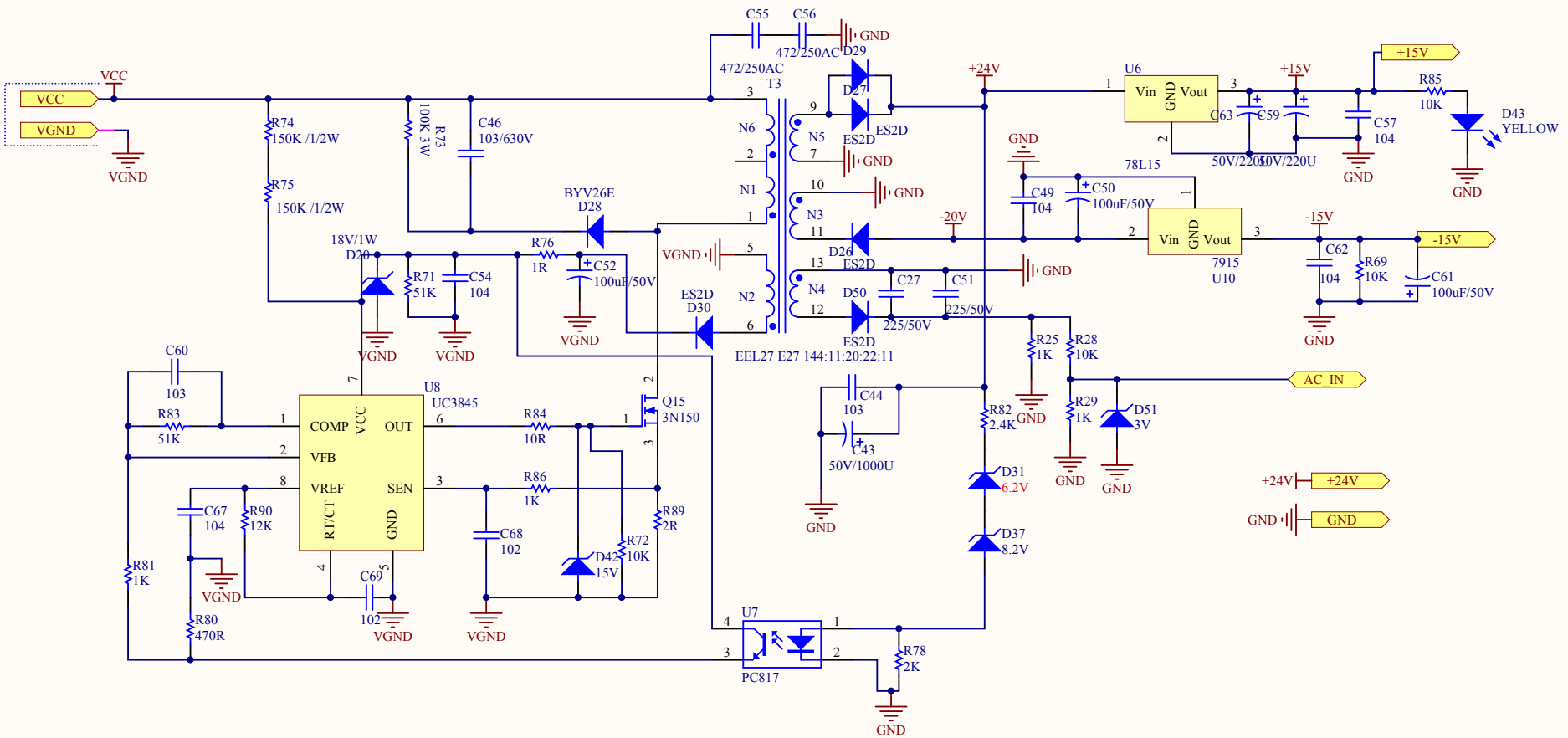
VCC
VGND
R74
150K /1/2W
R75
150K /1/2W
R73
100K 3W
C46
103/630V
18V/1W
D20
R71
51K
C54
104
BYV26E
D28
R76
1R
C52
100uF/50V
ES2D
D30
C55
472/250AC
C56
472/250AC
T3
N6
N5
N1
N3
N4
N2
D29
D27
ES2D
D26
D50
EEL27 E27 144:11:20:22:11
C27
225/50V
C51
225/50V
+24V
-20V
U6
Vin
GND
Vout
C63
50V/220U
C59
50V/220U
C57
104
+15V
R85
10K
D43
YELLOW
78L15
C49
104
C50
100uF/50V
7915
U10
-15V
C62
104
R69
10K
C61
100uF/50V
R25
1K
R28
10K
AC_IN
R29
1K
D51
3V
C44
103
C43
50V/1000U
R82
2.4K
D31
6.2V
D37
8.2V
C60
103
R83
51K
U8
UC3845
COMP
VFB
VREF
RT/CT
VCC
OUT
SEN
GND
R84
10R
R86
1K
Q15
3N150
R89
2R
R72
10K
D42
15V
C67
104
R90
12K
C68
102
C69
102
R81
1K
R80
470R
U7
PC817
R78
2K
+24V
GND

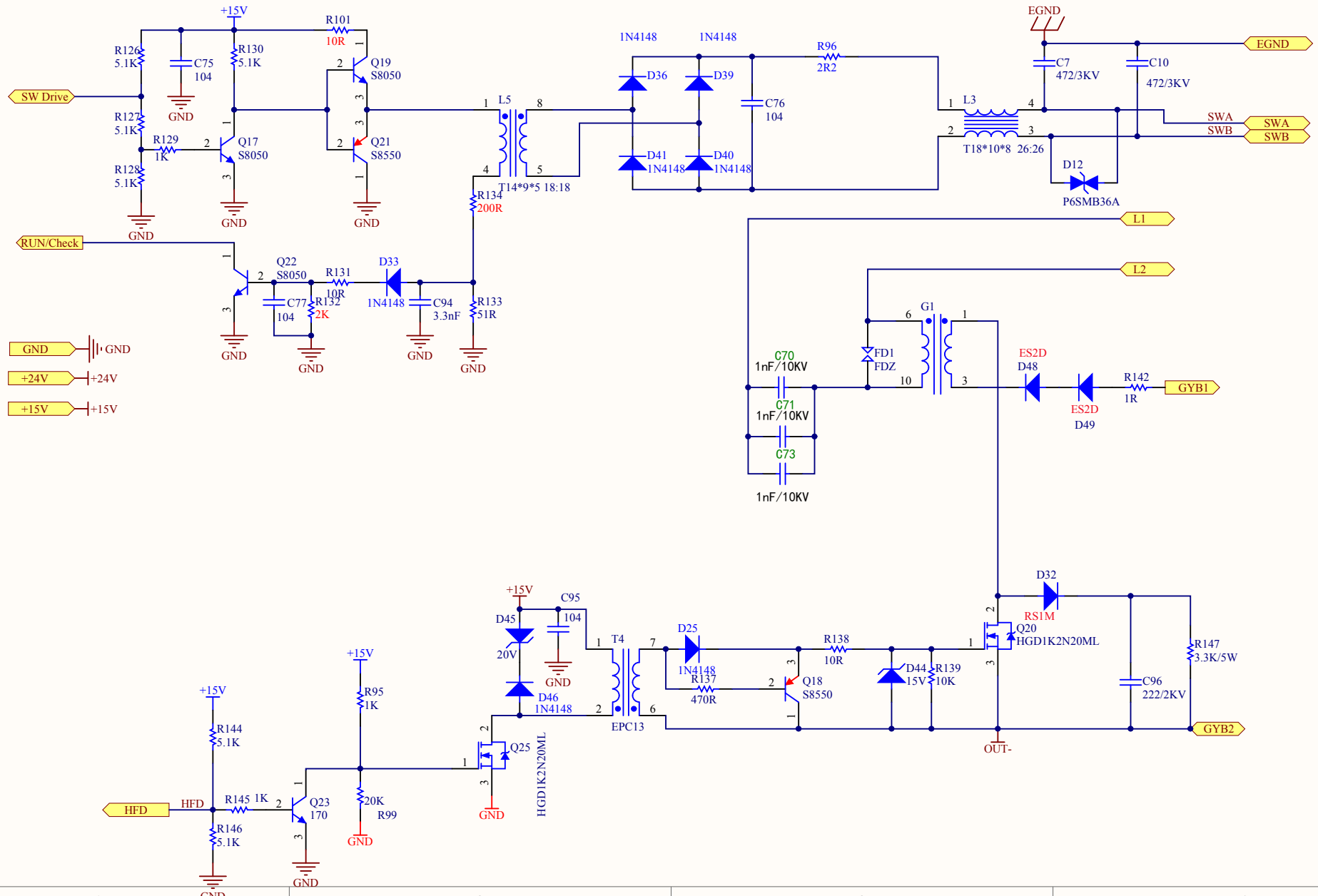
SW Drive
RUN/Check
GND
+24V
+15V
HFD
EGND
SWA
SWB
L1
L2
GYB1
GYB2
OUT-
R126 5.1K
R127 5.1K
R128 5.1K
R129 1K
R130 5.1K
R101 10R
C75 104
Q17 S8050
Q19 S8050
Q21 S8550
L5
T14*9*5 18:18
R134 200R
Q22 S8050
R131 10R
C77 104
R132 2K
D33 1N4148
C94 3.3nF
R133 51R
1N4148
D36
D39
D41 1N4148
D40 1N4148
C76 104
R96 2R2
L3
T18*10*8 26:26
C7 472/3KV
C10 472/3KV
D12 P6SMB36A
C70 1nF/10KV
C71 1nF/10KV
C73 1nF/10KV
FD1 FDZ
G1
ES2D D48
ES2D D49
R142 1R
D32 RS1M
Q20 HGD1K2N20ML
R147 3.3K/5W
C96 222/2KV
C95 104
D45 20V
D46 1N4148
T4 EPC13
D25 1N4148
R137 470R
R138 10R
Q18 S8550
D44 15V
R139 10K
R144 5.1K
R145 1K
R146 5.1K
Q23 170
R95 1K
20K R99
Q25 HGD1K2N20ML