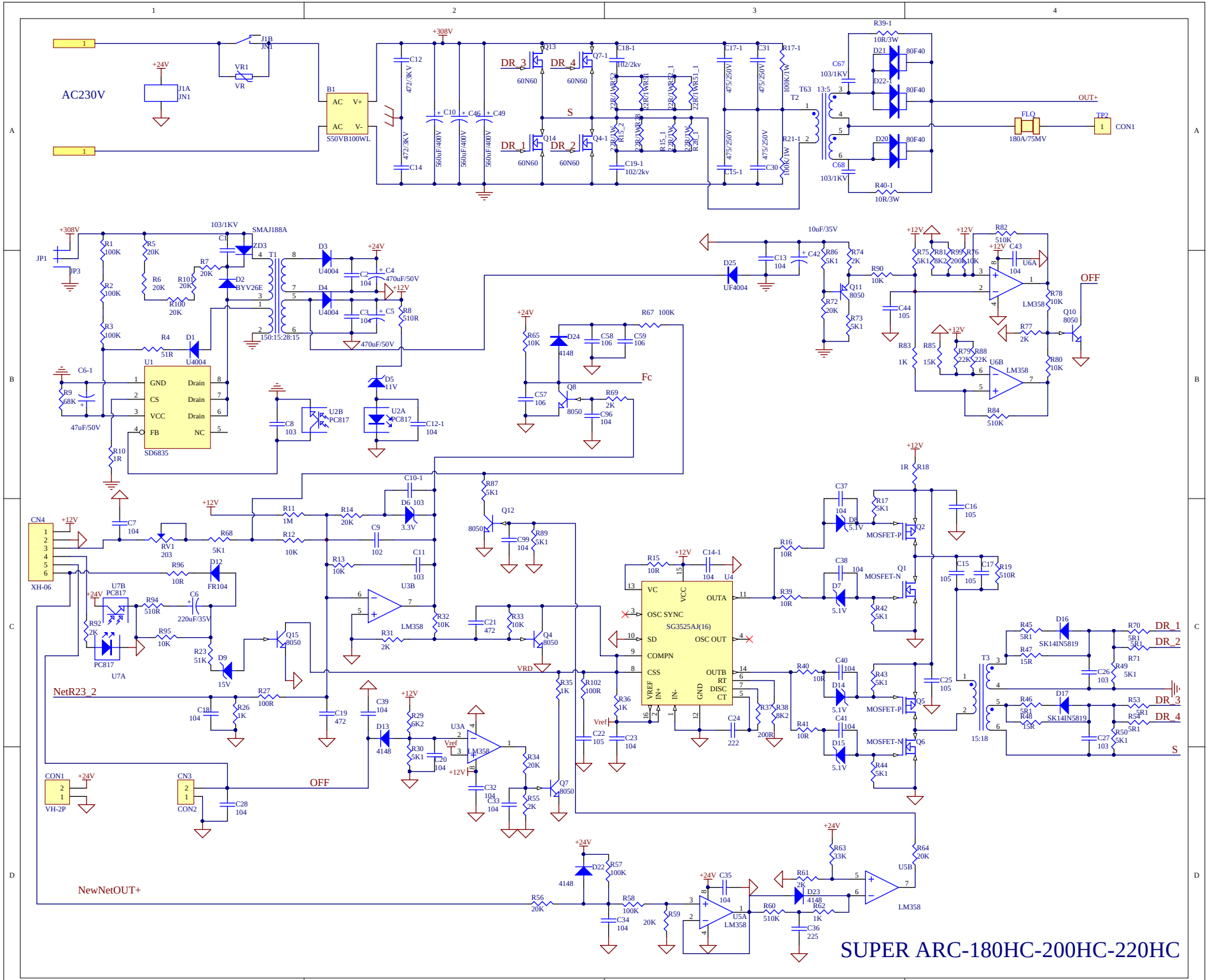
AC230V
J1A
JN1
J1B
JN1
VR1
VR
+24V
B1
AC V+
AC V-
S50VB100WL
+308V
C12
472/3KV
C14
472/3KV
C10
C46
C49
560uF/400V
DR_3
DR_4
DR_1
DR_2
S
Q13
Q7-1
Q14
Q4-1
60N60
C18-1
C19-1
102/2kv
R17-1
100K/1W
R21-1
C17-1
C31
C15-1
C30
475/250V
T2
T63
13:5
R39-1
10R/3W
R40-1
10R/3W
C67
C68
103/1KV
D21
D22-1
D20
80F40
OUT+
FLQ
180A/75MV
TP2
CON1
JP1
JP3
R1
100K
R2
100K
R3
100K
R5
20K
R6
20K
R7
20K
R101
20K
R100
20K
R4
51R
D1
U4004
D2
BYV26E
103/1KV
C1
SMAJ188A
ZD3
T1
150:15:28:15
D3
D4
U4004
C2
104
C3
104
C4
470uF/50V
C5
470uF/50V
R8
510R
+12V
C6-1
R9
68K
47uF/50V
R10
1R
U1
GND
CS
VCC
FB
Drain
NC
SD6835
C8
103
U2B
PC817
U2A
PC817
D5
11V
C12-1
104
+24V
R65
10K
D24
4148
C58
106
C59
106
R67
100K
C57
106
Q8
8050
R69
2K
C96
104
Fc
D25
UF4004
C13
104
10uF/35V
C42
R86
5K1
R74
2K
Q11
8050
R72
20K
R73
5K1
R90
10K
C44
105
R75
5K1
R81
8K2
R99
200K
R76
10K
R82
510K
C43
104
U6A
LM358
R78
10K
Q10
8050
OFF
R77
2K
R83
1K
R85
15K
R79
22K
R88
22K
U6B
LM358
R80
10K
R84
510K
CN4
XH-06
C7
104
RV1
203
R68
5K1
R11
1M
R12
10K
R14
20K
C9
102
C10-1
D6
103
3.3V
R13
10K
C11
103
U3B
LM358
R31
2K
R32
10K
R87
5K1
Q12
8050
R89
5K1
C99
104
R96
10R
D12
FR104
U7B
PC817
R94
510R
C6
220uF/35V
R92
2K
R95
10K
PC817
U7A
R23
51K
D9
15V
Q15
8050
NetR23_2
R27
100R
C18
104
R26
1K
C19
472
C21
472
R33
10K
Q4
8050
VRD
R35
1K
R102
100R
C22
105
C23
104
R36
1K
Vref
R15
10R
C14-1
104
U4
VC
VCC
OUTA
OSC SYNC
SG3525AJ(16)
SD
OSC OUT
COMPN
CSS
OUTB
RT
DISC
CT
VREF
IN+
IN-
GND
C24
222
R37
200R
R38
6K2
R16
10R
R39
10R
R40
10R
R41
10R
C37
104
D8
5.1V
C38
104
D7
5.1V
C40
104
D14
5.1V
C41
104
D15
5.1V
R17
5K1
R42
5K1
R43
5K1
R44
5K1
MOSFET-P
MOSFET-N
Q1
Q2
Q5
Q6
1R
R18
C16
105
C15
105
C17
105
R19
510R
C25
105
T3
15:18
R45
5R1
R47
15R
D16
SK14IN5819
R70
5R1
R71
5R1
R49
5K1
C26
103
R46
5R1
R48
15R
D17
SK14IN5819
R53
5R1
R54
5R1
R50
5K1
C27
103
DR_1
DR_2
DR_3
DR_4
S
CON1
VH-2P
CN3
CON2
C28
104
OFF
C39
104
D13
4148
R29
6K2
R30
5K1
C20
104
U3A
LM358
C32
104
C33
104
R34
20K
R55
2K
Q7
8050
NewNetOUT+
+24V
D22
4148
R57
100K
R56
20K
R58
100K
C34
104
R59
20K
C35
104
U5A
LM358
R61
2K
D23
4148
R62
1K
R60
510K
C36
225
R63
33K
R64
20K
U5B
LM358
SUPER ARC-180HC-200HC-220HC