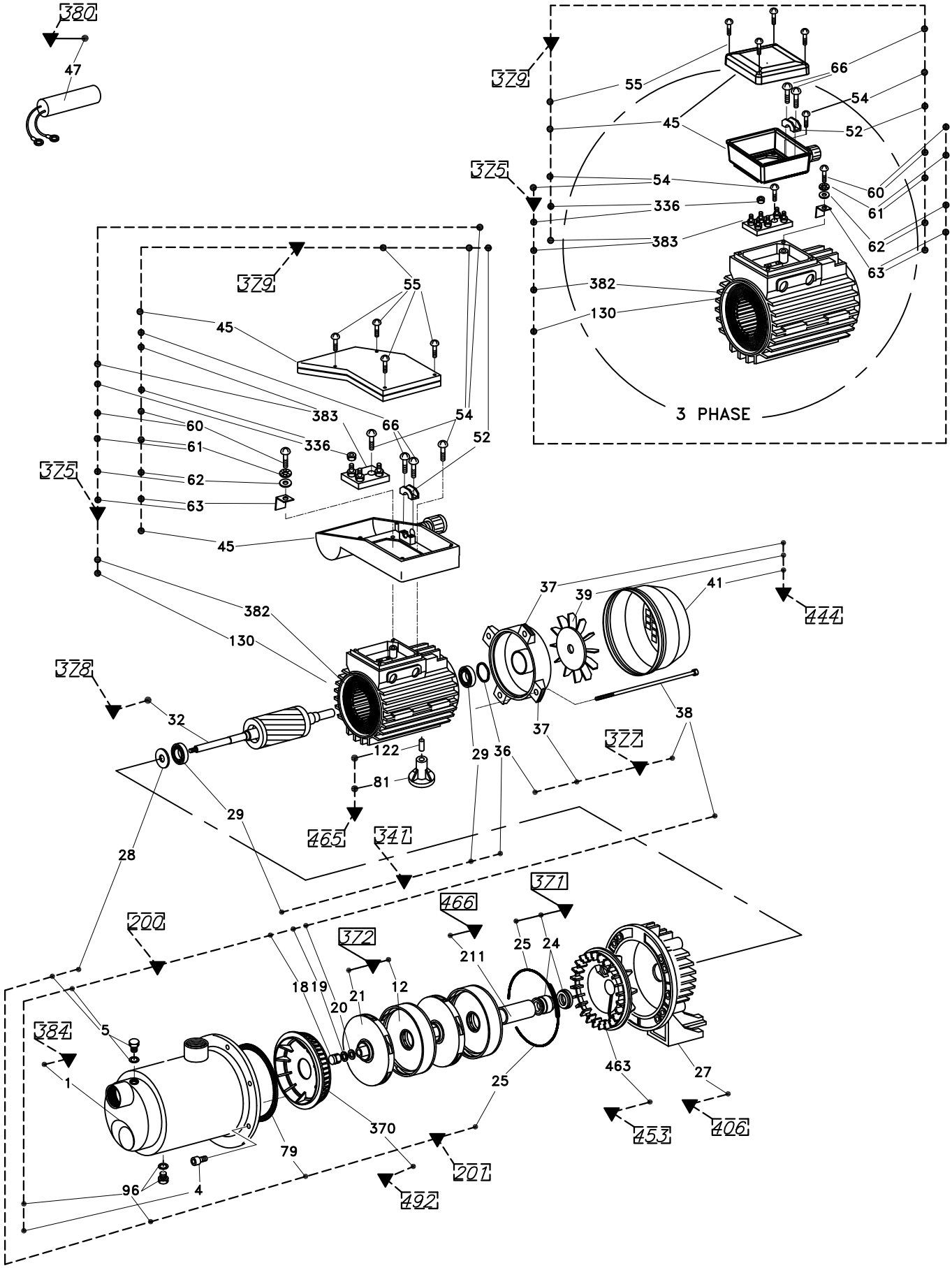

Pentair Water	Pentair Water Italy S.r.l. Via Masaccio,13 56010 Lugnano (PI) ITALY	Drawn A.Bertola	Title MXC 80-120 / MULTINOX-XC 80-120	Sheet 1 of 1
		Approved M.Bernacca	Date (dd/mm/yy) 26-05-11	Dwg # DR100006_01

This drawing is the absolute property of Pentair Water Italy S.r.l.. It may not be reproduced in any form without the written permission of Pentair Water Italy S.r.l..