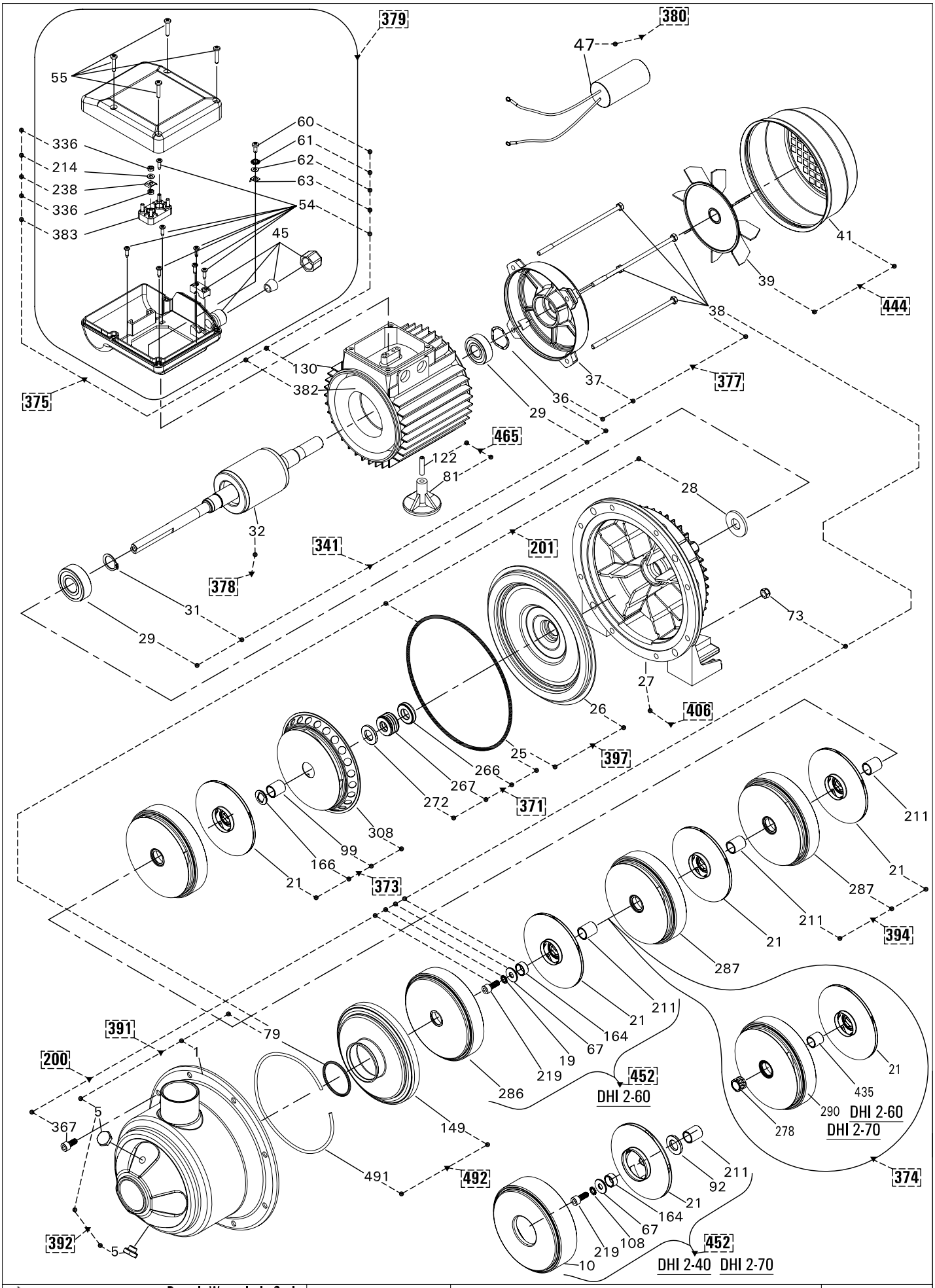

Pentair Water Italy S.r.l. Via Masaccio,13 56010 Lugnano (PI) ITALY	Drawn A.Bertola	Title DHI 2	Sheet 1 of 1
	Approved M.Bernacca	Date (dd/mm/yy) 12/07/2010	Dwg # DR090009_00

This drawing is the absolute property of Pentair Water Italy S.r.l.. It may not be reproduced in any form without the written permission of Pentair Water Italy S.r.l...